Physical Properties and Natural Durability of Fast-Growing Teak at 12 Years-old Against Subterranean and Drywood Termites

Tomy Listyanto[1*], Fratama Yudhana[2], Hanan Purana Putera,[2] Sugi Purwanta[3], Ganis Lukmandaru[1], Joko sulistyo[1], & Sri Nugroho Marsoem[1]

[1]Forest Product Technology Department, Faculty of Forestry, Universitas Gadjah Mada, Jl. Agro No. 1, Bulaksumur, Sleman, 55281
[2]Master Students in Master in Forestry Science,, Faculty of Forestry, Universitas Gadjah Mada, Jl. Agro No. 1, Bulaksumur, Sleman, 55281
[3]Centre of Research and Development, Perhutani.
* Email: tomy.listyanto@gadjahmada.edu

ABSTRACT

The aim was to investigate the effect of location and radial position of the sample of fast rowing teak wood at 12 years old on moisture content, specific gravity, and natural durability. A total of ten trees of fast-growing teak grown in Pemalang and Ngawi, Perhutani (Indonesian State Forest Company) were selected as samples of this research. Collecting samples were also reflecting radial positions in the wood, which are sapwood and heartwood. Sample for green moisture content and specific gravity were measured based on British Standard no 373 (1957). Samples for determining of natural durability were conducted by graveyard test and against dry wood termites in accordance to Indonesian Standard SNI 01-7207-2006. The result showed that there is significant influence of growth location and radial position of the sample in the stem on green moisture content, specific gravity and natural durability against subterranean termites. Natural durability of this fast-growing teak wood is slightly lesser than that of mature one. Durability class of sample from Ngawi is slightly better than that of Pemalang. Durability class of the sample from Ngawi is between Class III and Class IV while sample from Pemalang is Class V. Natural durability class of the sample against drywood termites is in class II-III.

Keywords: fast-growing teak wood, growth place, durability class, termite.

Introduction

Teak (*Tectona grandis L. f.*), which has been widely planted in Indonesia, is a luxury hardwood due to its workability, beautiful appearance, and high natural durability (Martawijaya et al. 2005). This outstanding quality for a broad range of its utilization from furniture, handcraft into heavy building structure materials, are resulted from a long rotation age of teak. However, because of intensive exploitation, there is a shortage of supply of mature teakwood. Perhutani, which is one of the greatest of Indonesian State Forest Companies produce teak with a total of 315 m^3 during 2013-2017 (Perhutani, 2018). Perhutani (2018) also reported that teak plantation is dominated by age class II (11-20 year) and III (21-30 years), which are 14,070.61 ha and 16,968.70 ha respectively. This information is still relatively low to meet the demand of national teak wood reaching 2 million m^3/ year.

Fast-growing teak has been established to substitute the demand for high-quality teak. Perhutani, collaborate with Faculty of Forestry, Universitas Gadjah Mada promoted fast-growing teak since last 15 years ago. This program established fast-growing clones which are superior one called *Jati Plus Perhutani (JPP)*. These superior clones have been selected for the wider plantations, which reached 197,717 ha in 2016. Based on the primary observation, this fast-growing teak at 12 years-old can reach diameter of 25 cm and height of 18 m or having mean annual increment of 13,8 m^3/ha/year. Another observation in Forest Management Unit in Pemalang District showed that the volume of harvesting can reach 200 m^3/ha. This growth performance is satisfying market demand of teakwood. However, wood properties of this fast-growing species have been questioned. The proportion of sapwood is seemed to be more dominant compared to the matured wood. This condition may correlated to physical properties and the natural durability, which may differ with the mature one. The aim of this study was to investigate the effect of site/location and radial position of the sample of superior teak wood on moisture content, specific gravity, and natural durability of 12 years.

Material and Method

A total of ten trees of fast-growing teak grown in Forest Management Unit of Pemalang and Ngawi, Perhutani (Indonesian State Forest Company) were selected as samples of this research. From each tree, a section log with length of two m was taken at 130 cm above the forest floor. The logs were sawn into sample for moisture content, specific gravity, and durability. The detailed collecting sample can be seen in Figure 1. Collecting sample was also reflecting a radial position in the wood, which are sapwood and heartwood. Sample for green moisture content and specific gravity were measured based on British Standard no 373 (1957). Samples for determining of natural durability were conducted by graveyard test and against dry wood termites in accordance with Indonesian Standard SNI 01-7207-2006. Graveyard test was conducted for 6 months (Fig. 2). The mass losses of the sample than classified based on Table 1-2. Analysis of variance was used to determine the effect of site/location and radial position. Tukey post-hoc test was used to determine the differences.

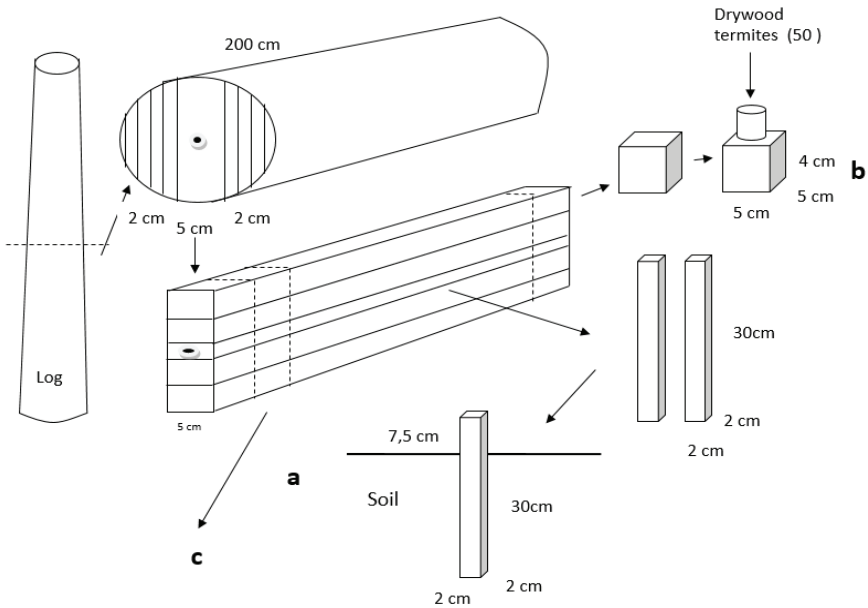

Figure1. Collecting the sample and preparation for durability test with grave yard test and against drywood termites.

Figure 2. The graveyard test and against subterranean termites.

Table 1. Classification of wood durability class against subterranean termites in accordance to SNI 01-7207-2006

Class	Durability	Mass Losses (%)
I	Very Durable	< 3,52
II	Durable	3,52-7,50
III	Moderate	7,50-10,96
IV	Slightly durable	10,96-18,94
V	Not Durable	18,94-31,89

Table 2. Classification of wood durability class against Drywood termites in accordance to SNI 01-7207-2006

Class	Durability	Mass Losses (%)
I	Very Durable	< 2
II	Durable	2-4,4
III	Moderate	4,4-8,2
IV	Slightly durable	8,2-28,1
V	Not Durable	>28,1

Results and Disussion

Green Moisture Content and Specific gravity

It is important to understand green moisture content and a specific gravity of the trees that used for investigating the natural durability. The green condition with high moisture content is subject to be attacked by organisms. The green moisture content of the sample from Pemalang is significantly higher ($P < 0.05$) than that of Ngawi. The green moisture content of the sample from Pemalang is 85.36% for sapwood and 90.77% for heartwood. The green moisture content of the sample from Ngawi is 94.21% for sapwood and 100.44% for heartwood. This result may correlate with the average rainfall in the location. Average rainfall of Pemalang is 2834 mm / year while Ngawi is 157 mm / year. A higher rainfall may contribute to growth condition lead to higher green moisture content of the trees from Pemalang.

In terms of specific gravity, there is no significant influence ($P < 0.05$) of the location. The specific gravity of the sample from Ngawi is in the range of 0.52-0.54 while sample from Pemalang is 0.54. Specific gravity is also not significantly influenced by radial position of the sample. This specific gravity is slightly higher than reported by Hidayati et al. (2015) that specific gravity of superior teak from forest Management Unit Randublatung which was 0.47. This results also slightly higher with specific gravity of superior teak from Central Java at 9-years old which was 0.51 (Basri & Wahyudi. 2012). Comparing to the mature teakwood, specific gravity from this fast-growing teak at 12 years old is slightly lower. Martawijaya et. al. (2005) stated that specific gravity of teak wood is 0.67. There is tendency that specific gravity increase as an increased of the age.

Tabel 3. Green moisture content (%) and a specific gravity of sample from Ngawi and Pemalang ant sapwood and heartwood position.

Location	Radial Position	Green Moisture Content (%)	Specific Gravity
Ngawi	Sapwood	86.36 ± 1,18	0,54 ± 0,020
	Heartwood	90.77 ± 4,01	0,52 ± 0,010
Pemalang	Sapwood	94.21 ± 2,15	0,54 ± 0,015
	Heartwood	100.40 ± 4,65	0,54 ± 0,020

Durability against subterranean termites

After 6-month graveyard test, mass losses of the sample from Ngawi and Pemalang were significantly different. Mass losses sample from Pemalang was 23.89% which is higher than that of Ngawi, which was 11% (Fig. 3). This indicates that sample from Ngawi seemed to be more durable than that of Pemalang. This result is similar to the research of Nagaveni (2011) who found that the natural durability of wood is influenced by the location where plants grow. Termite attacks are higher in wood originating from places with higher rainfall than wood originating from areas with lower rainfall (Nagaveni 2011). Montero et al. (2015) also stated that rainfall and soil fertility affect the termite attack which was shown in his research that Costa Rican teak originating from land with low fertility conditions has a higher resistance value to termite attack than teak originating from land with high fertility and rainfall.

In terms of position of the sample in the radial direction, mass losses of sapwood sample are higher significantly ($P<0.05$) than that of heartwood sample. Mass losses of heartwood sample is 24.49% while sample of sapwood is 10.40% Fig. 3. Visual observation can bee seen in Fig. 5. These results indicate that heartwood is more durable than sapwood. The radial part of the wood also affects the natural durability of the wood. According to Hillis (1987), heartwood is more durable because it has more extractive content than sapwood. The results are also consistent with the research of Franca et al. (2016) who observed that the heartwood of African Mahogany has a higher natural durability than the sapwood part against weathering fungus attacks. Lukmandaru and Takahashi (2008) investigated that there are radial variations in teak which indicate that the heartwood is more durable than sapwood because its extractive content is higher. Moya et al. (2014) added that the natural durability of heartwood from fast-growing plants can also be influenced by radial variations. Moya and Berrocal (2010) in their study demonstrated that heartwood with a darker color has higher durability than sapwood which has lighter color. This is because the dark heartwood contains extractives such as tectoquinone, naphthaquinone and ethanol or water-soluble extractives.

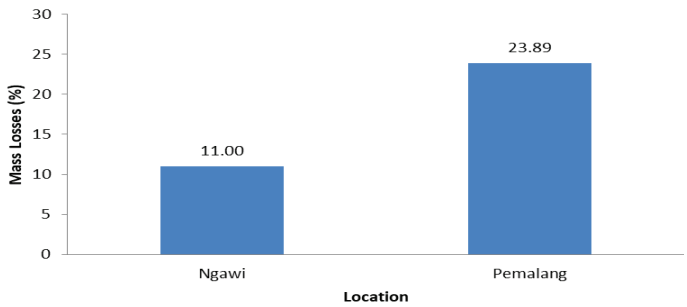

Fig. 3. Mass Losses of the sample from Ngawi and Pemalang after the graveyard test.

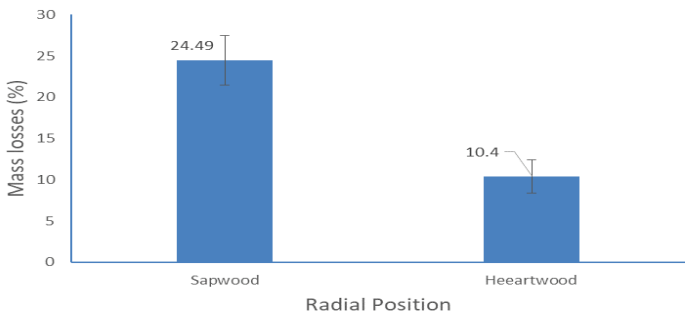

Fig 4. Mass Losses of the sample at different radial position in the stem during the grave yard test.

Mass losses of the sample after the graveyard test were matched with durability classification (Table 1) in accordance to SNI 01-7207-2006. The results showed that durability class of sample from Ngawi is slightly better than that of Pemalang. Durability class of the sample from Ngawi is between Class III and Class IV while sample from Pemalang is Class V (Table 4). This result is less durable than mature wood that reported by Martawijaya *et al.* (2005) which durability of teak is in Class II.

Table 4. Durability class superior teak wood against subterranean termites.

Location	Radial position	Durability Class	Ketahanan
Ngawi	Heartwood	IV	Slightly durable
	Sapwood	III	Moderate
Pemalang	Heartwood	V	Not Durable
	Sapwood	V	Not Durable

Fig 5. Condition of the sample from Ngawi (above) and Pemalang (bellow) after the grave yard test.

Natural durability against dry wood termites

Natural durability against dry wood termite is slightly better than that of against subterranean termites. Mortality of the drywood termites reached 94-99 % after 28 days test. Mass losses is also quite less, which were 0.99-1.43 after 3 months (Table 5). According to analisis of variance, there is no significant influence of growth location and position of the sample in radial direction. Based on SNI 01-7207-2006, durability class of the sample against drywood termites is in class II-III (Table 6). This durability class is better than the result of graveyard test. Sulastiningsih et al. (2000) in the research using rubberwood and durian, stated that the subterranean termites attacks is more severe than from the dry wood termites. In general, natural durability of this fast-growing teak wood, which is also superior one in growth, is slightly lower than the mature one. It is important consider preservation to improve durability.

Table 5. Green moisture content (%) and a specific gravity of sample from Ngawi and Pemalang ant sapwood and heartwood position.

Location	Radial Position	Mortality (%)	Mass Losses (%)
Ngawi	Sapwood	90	1.15
	Heartwood	94	0.99
Pemalang	Sapwood	96	1.43
	Heartwood	99	1.34

Table 6. Durability class superior teak wood against subterranean termites.

Location	Radial position	Durability Class	Category
Ngawi	Heartwood	III	Moderate
	Sapwood	II	Durable
Pemalang	Heartwood	III	Moderate
	Sapwood	III	Moderate

Conclusion

It can be concluded that there is significant influence of growth location and radial position of the sample in the stem on green moisture content, specific gravity and natural durability against subterranean termites. Natural durability of this fast-growing teak wood is slightly lesser than that of mature one. Durability class of sample from Ngawi is slightly better than that of Pemalang. Durability class of the sample from Ngawi is between Class III and Class IV while sample from Pemalang is Class V. Natural durability class of the sample against drywood termites is in class II-III.

Acknowledgments

The author expresses sincere thanks to the Research Centre, Forest Management Unit Pemalang and Ngawi, Perum Perhutani for providing sample trees. Sincere thanks also to the Research Project of PTUPT Grant and RTA Grant for the funding this research.

References

Basri, E dan Wahyudi. 2013. Sifat dasar kayu jati plus perhutani dari berbagai umur dan kaitannya dengan sifat dan kualitas pengeringan. J. Penelitian Hasil Hutan Vol. 31 (2) : 93-102.

British Standard (BS) 373:1957: Methods of Testing Small Clear Specimens of Timber. British Standard Institution, London. 22.

Franca, T.S.F.A., F.J.N. Franca, R.A. Arango, B.M. Woodward dan M.D.C. Arantes. 2016. Natural Resistance of Plantation Grown African Mahagony (Khaya ivorensis and Khaya senegalensis) from Brazil to Wood-Rot Fungi and Subterranian Termites. International Bioedeterioration and Biodegradation ,Volume 107, pages 88-91.

Hidayati, F., Sulistyo, J., Lukmandaru G., Listyanto, T., Praptoyo, H., and Pujiarti, R. 2015. Physical and Mechanical Properties of 10-Year Old Superior and Conventional Teak Planted in

Hillis, W. E. 1987. *Heartwood and Tree Exudates*. Springer-Verlag Berlin Heidelberg.

Lukmandaru G, Takahashi K. 2008. Variation in the natural termite resistance of teak (*Tectona grandis* Linn fil.) wood as a function of tree age. *Ann For Sci*, **65**: 708.

Martawijaya, A., I. Kartasudjana. Y. I. Mandang, S.A. Prawira, dan K. Kadir. 2005. *Atlas Kayu Indonesia Jilid I*. Departemen Kehutanan, Badan Penelitian dan Pengembangan Kehutanan. Bogor.

Montero, R.S., R. Moya, A. Berrocal, G.G. Trejos, dan R.C. Foglia. 2015. General, physical and mechanical properties, termites resistance and drying defects of lumber of tectona grandis from plantation of different climatic and sites fertility condition. *Journal of the Indian Academy of Wood Science.* Volume 12, Pages 63-73.

Moya, R. dan A. Berrocal. 2010 Wood colour variation in sapwood and heartwood of young treea of Tectona grandis and its relationship with plantation characteristics, site, and decay resistance. *Ann. For. Sci* 67 (2010) 109

Moya, R., B. Bond. Dan H. Quesada. 2014. A review of heartwood properties of Tetctona grandis trees from fast-growth plantations. *Wood Sci Technol* (2014)48:411-433

Nagaveni, H.C., G. Vijayalakshmi, D. Venmalar, dan O.K.R. Emadevi. 2011. Durability of timber of grevillea robusta (A*. Cunn*. Ex r. Br.) At different ages, grown in dry and wet regions of karnataka. *Journal of The Indian Academy of Wood Science,* Vol 8, Issue 2, Pages 173-176.

Nagaveni, H.C., G. Vijayalakshmi, D. Venmalar, dan O.K.R. Emadevi. 2011. Durability of timber of grevillea robusta (A*. Cunn*. Ex r. Br.) At different ages, grown in dry and wet regions of karnataka. *Journal of The Indian Academy of Wood Science,* Vol 8, Issue 2, Pages 173-176.

Perhutani. 2018. Perhutani Statistic Book 2012-2017. Perhutani. Jakarta

Standar Nasional Indonesia. 2006. (SNI) 01-7207-2006: Durability Test For Wood Against Wood Deteriorate Organisme.

Sulastiningsih, I.M. Jasni dan P. Sutigno. 2000. Pengaruh Jenis Kayu dan Permehtrin Terhadap Keteguhan Rekat dan Keawetan Kayu Lapis. *Buletin Penelitian Hasil Hutan*. Vol. 18 No. 2 pp 55-67